ELECTRONICA DIGITAL III

ARM - Cortex M3

Advanced RISC Machines

ADC

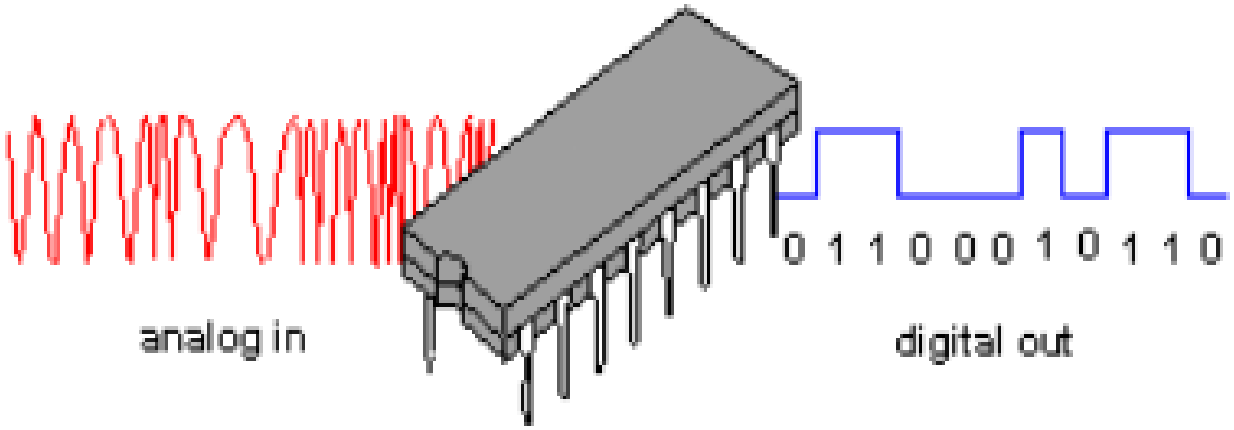

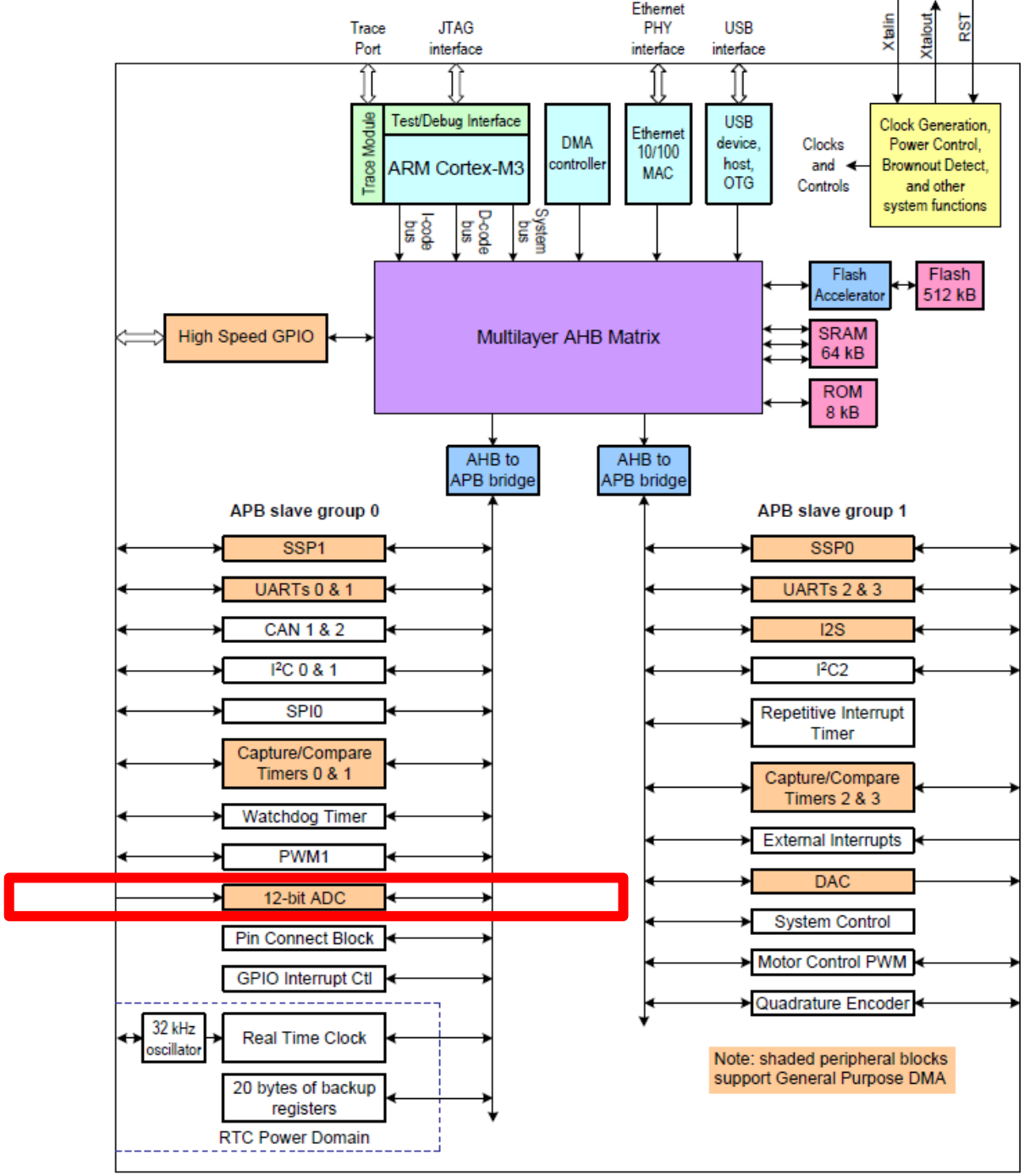

LPC1768 simplified block diagram

ADC

- Convertidor analógico a digital de aproximación sucesiva de 12 bits.
- Multiplexado de entrada entre 8 pines.
- Modo de apagado.
- Rango de medición VREFN a VREFP (típicamente 3 V, sin exceder el nivel de voltaje VDDA).
- Tasa de conversión de 12 bits de 200 kHz.
- Modo de conversión de ráfaga para entradas simples o múltiples.
- Conversión opcional en la transición en el pin de entrada o la señal de coincidencia del temporizador.

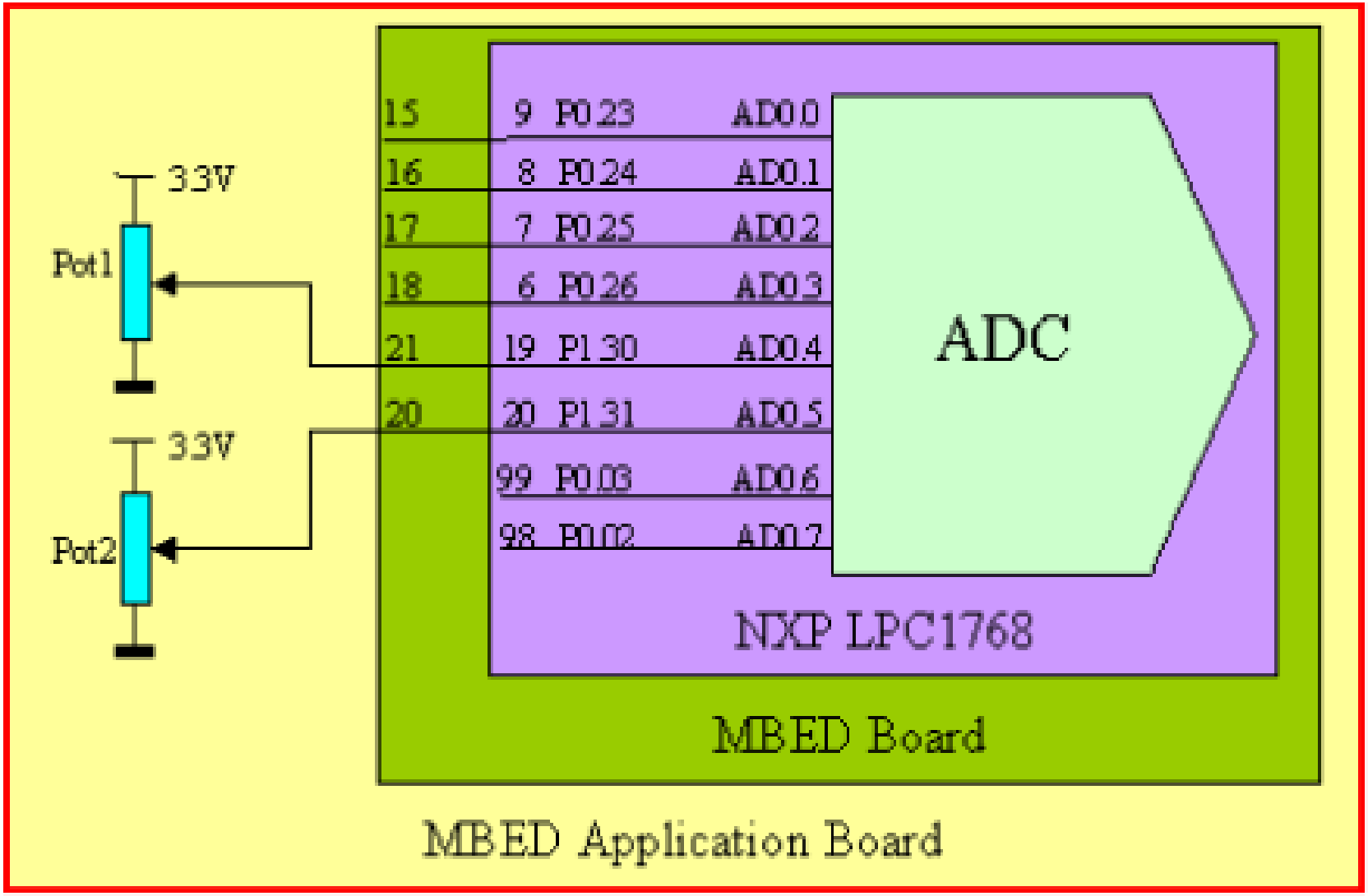
3.3V
Pot1
3.3V
Pot2
15
16
17
18
21
20
9 P0.23 AD0.0
8 P0.24 AD0.1
7 P0.25 AD0.2
6 P0.26 AD0.3
19 P1.30 AD0.4
20 P1.31 AD0.5
99 P0.03 AD0.6
98 P0.02 AD0.7
ADC
NXP LPC1768
MBED Board
MBED Application Board

Usar cualquier dispositivo periférico implica tres pasos principales:

1. Encender el periférico

2. Configurando el reloj periférico

3. Configurar las funciones pin

Alimentar los periféricos o encenderlos se controla a través del Registro de Control de Potencia para Periféricos (PCONP).

Table 46. Power Control for Peripherals register (PCONP - address 0x400F C0C4) bit description

Bit	Symbol	Description	Reset value
0	-	Reserved.	NA
1	PCTIM0	Timer/Counter 0 power/clock control bit.	1
2	PCTIM1	Timer/Counter 1 power/clock control bit.	1
3	PCUART0	UART0 power/clock control bit.	1
4	PCUART1	UART1 power/clock control bit.	1
5	-	Reserved.	NA
6	PCPWM1	PWM1 power/clock control bit.	1
7	PCI2C0	The I^2C0 interface power/clock control bit.	1
8	PCSPI	The SPI interface power/clock control bit.	1
9	PCRTC	The RTC power/clock control bit.	1
10	PCSSP1	The SSP 1 interface power/clock control bit.	1
11	-	Reserved.	NA
12	PCADC	A/D converter (ADC) power/clock control bit. **Note:** Clear the PDN bit in the AD0CR before clearing this bit, and set this bit before setting PDN.	0
13	PCCAN1	CAN Controller 1 power/clock control bit.	0
14	PCCAN2	CAN Controller 2 power/clock control bit.	0
15	PCGPIO	Power/clock control bit for IOCON, GPIO, and GPIO interrupts.	1
16	PCRIT	Repetitive Interrupt Timer power/clock control bit.	0
17	PCMCPWM	Motor Control PWM	0
18	PCQEI	Quadrature Encoder Interface power/clock control bit.	0
19	PCI2C1	The I^2C1 interface power/clock control bit.	1
20	-	Reserved.	NA
21	PCSSP0	The SSP0 interface power/clock control bit.	1
22	PCTIM2	Timer 2 power/clock control bit.	0

La mayoría de los periféricos, incluidos los temporizadores y el ADC, requieren configurar un reloj periférico

Table 40. Peripheral Clock Selection register 0 (PCLKSEL0 - address 0x400F C1A8) bit description

Bit	Symbol	Description	Reset value
1:0	PCLK_WDT	Peripheral clock selection for WDT.	00
3:2	PCLK_TIMER0	Peripheral clock selection for TIMER0.	00
5:4	PCLK_TIMER1	Peripheral clock selection for TIMER1.	00
7:6	PCLK_UART0	Peripheral clock selection for UART0.	00
9:8	PCLK_UART1	Peripheral clock selection for UART1.	00
11:10	-	Reserved.	NA
13:12	PCLK_PWM1	Peripheral clock selection for PWM1.	00
15:14	PCLK_I2C0	Peripheral clock selection for I^2C0.	00
17:16	PCLK_SPI	Peripheral clock selection for SPI.	00
19:18	-	Reserved.	NA
21:20	PCLK_SSP1	Peripheral clock selection for SSP1.	00
23:22	PCLK_DAC	Peripheral clock selection for DAC.	00
25:24	PCLK_ADC	Peripheral clock selection for ADC.	00
27:26	PCLK_CAN1	Peripheral clock selection for CAN1.[1]	00
29:28	PCLK_CAN2	Peripheral clock selection for CAN2.[1]	00
31:30	PCLK_ACF	Peripheral clock selection for CAN acceptance filtering.[1]	00

[1] PCLK_CAN1 and PCLK_CAN2 must have the same PCLK divide value when the CAN function is used.

Table 42. Peripheral Clock Selection register bit values

PCLKSEL0 and PCLKSEL1 individual peripheral's clock select options	Function	Reset value
00	PCLK_peripheral = CCLK/4	00
01	PCLK_peripheral = CCLK	
10	PCLK_peripheral = CCLK/2	
11	PCLK_peripheral = CCLK/8, except for CAN1, CAN2, and CAN filtering when "11" selects = CCLK/6.	

Los pines se pueden configurar para realizar una de muchas funciones, recuerde que los registros PINSELx se usan para configurar la función de un pin. Para usar el ADC, debes configurar la función de un pin apropiado como entrada analógica (AD0.x en el manual).

Table 73. Pin description

Symbol	LQFP 100	LQFP 80	Type	Description
P0[0] to P0[31]			I/O	**Port 0:** Port 0 is a 32-bit I/O port with individual direction controls for each bit. The operation of port 0 pins depends upon the pin function selected via the pin connect block. Pins 12, 13, 14, and 31 of this port are not available.
P0[0] / RD1 / TXD3 / SDA1	46	37	I/O	**P0[0]** — General purpose digital input/output pin.
			I	**RD1** — CAN1 receiver input.
			O	**TXD3** — Transmitter output for UART3.
			I/O	**SDA1** — I^2C1 data input/output (this pin does not use a specialized I2C pad, see Section 19.1 for details).
P0[1] / TD1 / RXD3 / SCL1	47	38	I/O	**P0[1]** — General purpose digital input/output pin.
			O	**TD1** — CAN1 transmitter output.
			I	**RXD3** — Receiver input for UART3.
			I/O	**SCL1** — I^2C1 clock input/output (this pin does not use a specialized I2C pad, see Section 19.1 for details).
P0[2] / TXD0 / AD0[7]	98	79	I/O	**P0[2]** — General purpose digital input/output pin. When configured as an ADC input, digital section of the pad is disabled.
			O	**TXD0** — Transmitter output for UART0.
			I	**AD0[7]** — A/D converter 0, input 7.
P0[3] / RXD0 / AD0[6]	99	80	I/O	**P0[3]** — General purpose digital input/output pin. When configured as an ADC input, digital section of the pad is disabled.
			I	**RXD0** — Receiver input for UART0.
			I	**AD0[6]** — A/D converter 0, input 6.
P0[4] / I2SRX_CLK /	81	-	I/O	**P0[4]** — General purpose digital input/output pin.
			I/O	**I2SRX_CLK** — Receive Clock. It is driven by the master and received by

Table 75. Pin function select register bits

PINSEL0 to PINSEL9 Values	Function	Value after Reset
00	Primary (default) function, typically GPIO port	00
01	First alternate function	
10	Second alternate function	
11	Third alternate function	

PINES RELACIONADOS AL ADC

Entradas analógicas.
Son las que convertirá el conversor A/D

29.4 Pin description

Table 530 gives a brief summary of each of ADC related pins.

Table 530. ADC pin description

Pin	Type	Description
AD0.7 to AD0.0	Input	**Analog Inputs.** The ADC cell can measure the voltage on any of these input signals. Digital signals are disconnected from the ADC input pins when the ADC function is selected on that pin in the Pin Select register. **Warning:** if the ADC is used, signal levels on analog input pins must not be above the level of V_{DDA} at any time. Otherwise, A/D converter readings will be invalid. If the A/D converter is not used in an application then the pins associated with A/D inputs can be used as 5 V tolerant digital IO pins.
V_{REFP}, V_{REFN}	Reference	**Voltage References.** These pins provide a voltage reference level for the ADC and DAC. **Note: V_{REFP} should be tied to VDD(3V3) and V_{REFN} should be tied to V_{SS} if the ADC and DAC are not used.**
V_{DDA}, V_{SSA}	Power	**Analog Power and Ground.** These should typically be the same voltages as V_{DD} and V_{SS}, but should be isolated to minimize noise and error. **Note: VDDA should be tied to VDD(3V3) and VSSA should be tied to VSS if the ADC and DAC are not used.**

Tensión de referencia para la conversión. Si no hay especificaciones de niveles de tensión conectamos a VDD y Vss respectivamente

Tensión de alimentación del periférico.
Si no hay especificaciones de resolución conectamos a VDD y Vss.
Para disminuir ruido se puede utilizar una fuente externa.

REGISTROS DEL ADC

Table 531. ADC registers

Generic Name	Description	Access	Reset value[1]	AD0 Name & Address
ADCR	A/D Control Register. The ADCR register must be written to select the operating mode before A/D conversion can occur.	R/W	1	AD0CR - 0x4003 4000
ADGDR	A/D Global Data Register. This register contains the ADC's DONE bit and the result of the most recent A/D conversion.	R/W	NA	AD0GDR - 0x4003 4004
ADINTEN	A/D Interrupt Enable Register. This register contains enable bits that allow the DONE flag of each A/D channel to be included or excluded from contributing to the generation of an A/D interrupt.	R/W	0x100	AD0INTEN - 0x4003 400C
ADDR0	A/D Channel 0 Data Register. This register contains the result of the most recent conversion completed on channel 0.	RO	NA	AD0DR0 - 0x4003 4010
ADDR1	A/D Channel 1 Data Register. This register contains the result of the most recent conversion completed on channel 1.	RO	NA	AD0DR1 - 0x4003 4014
ADDR2	A/D Channel 2 Data Register. This register contains the result of the most recent conversion completed on channel 2.	RO	NA	AD0DR2 - 0x4003 4018
ADDR3	A/D Channel 3 Data Register. This register contains the result of the most recent conversion completed on channel 3.	RO	NA	AD0DR3 - 0x4003 401C
ADDR4	A/D Channel 4 Data Register. This register contains the result of the most recent conversion completed on channel 4.	RO	NA	AD0DR4 - 0x4003 4020
ADDR5	A/D Channel 5 Data Register. This register contains the result of the most recent conversion completed on channel 5.	RO	NA	AD0DR5 - 0x4003 4024
ADDR6	A/D Channel 6 Data Register. This register contains the result of the most recent conversion completed on channel 6.	RO	NA	AD0DR6 - 0x4003 4028
ADDR7	A/D Channel 7 Data Register. This register contains the result of the most recent conversion completed on channel 7.	RO	NA	AD0DR7 - 0x4003 402C
ADSTAT	A/D Status Register. This register contains DONE and OVERRUN flags for all of the A/D channels, as well as the A/D interrupt/DMA flag.	RO	0	AD0STAT - 0x4003 4030
ADTRM	ADC trim register.	R/W	0x0000 0F00	AD0TRM - 0x4003 4034

Registro de control

Registro de datos Globales

Habilitación de interrupciones

AD channel X data register

Status register

El registro de configuración principal para el ADC es el Registro de control A / D (AD0CR). La figura muestra los campos de registro ADC, Solo hay un ADC en el LPC1769. En el archivo de encabezado LPC17xx.h, el registro de control se conoce como ADCR; mientras que en el manual del chip se llama AD0CR. La razón de esto es que algunos otros chips tienen múltiples ADC, llamados: AD0CR, AD1CR, etc

Campos de registro de control A / D (AD0CR)

bit number																															
31	30	29	28	27	26	25	24	23	22	21	20	19	18	17	16	15	14	13	12	11	10	9	8	7	6	5	4	3	2	1	0
0	0	0	0	E	START			0	0	1	0	0	0	0	B																

RED are reserved bits and should be 0

Bit 21 is PDN should be 1 to enable the ADC
1 The A/D converter is operational.
0 The A/D converter is in power-down mode.

Bits 8 to 15 (called CLKDIV) are the binary representation for a number (n).
The clock for DAC will be PCLK/(n+1).
The clock has to be < 13 MHz.

Bits 24, 25 and 26 (called START).
START = 000 (no start). Still the ADC can be continuously running if bit 16 is 1.
START = 001 (Stat conversion now). Analog value is converted to digital one time.
The remaining 6 combinations allow different hardware sources to trigger or start conversion. Check LPC176x manual for details.

Bits 0 to 7 (called SEL) .
Place "1" in any of bits 0 to 7 to activate the corresponding ADC channel.

Bits 16 and 27 are related to START bits.
See the text below for details.

BURST

Bit	Label	Value	Effect
16	B	0	The START bits control when the ADC starts the conversion
		1	The ADC is continuously running (START should be 000)
27	E	0	Start conversion on a falling edge DESCENDENTE
		1	Start conversion on a rising edge ASCENDENTE

EDGE

Table 532: A/D Control Register (AD0CR - address 0x4003 4000) bit description

Bit	Symbol	Value	Description	Reset value
7:0	SEL		Selects which of the AD0.7:0 pins is (are) to be sampled and converted. For AD0, bit 0 selects Pin AD0.0, and bit 7 selects pin AD0.7. In software-controlled mode, only one of these bits should be 1. In hardware scan mode, any value containing 1 to 8 ones is allowed. All zeroes is equivalent to 0x01.	0x01
15:8	CLKDIV		The APB clock (PCLK_ADC0) is divided by (this value plus one) to produce the clock for the A/D converter, which should be less than or equal to 13 MHz. Typically, software should program the smallest value in this field that yields a clock of 13 MHz or slightly less, but in certain cases (such as a high-impedance analog source) a slower clock may be desirable.	0
16	BURST	1	The AD converter does repeated conversions at up to 200 kHz, scanning (if necessary) through the pins selected by bits set to ones in the SEL field. The first conversion after the start corresponds to the least-significant 1 in the SEL field, then higher numbered 1-bits (pins) if applicable. Repeated conversions can be terminated by clearing this bit, but the conversion that's in progress when this bit is cleared will be completed. **Remark:** START bits must be 000 when BURST = 1 or conversions will not start. If BURST is set to 1, the ADGINTEN bit in the AD0INTEN register (Table 534) must be set to 0.	0
		0	Conversions are software controlled and require 65 clocks.	
20:17	-		Reserved, user software should not write ones to reserved bits. The value read from a reserved bit is not defined.	NA
21	PDN	1	The A/D converter is operational.	0
		0	The A/D converter is in power-down mode.	
23:22	-		Reserved, user software should not write ones to reserved bits. The value read from a reserved bit is not defined.	NA
26:24	START		When the BURST bit is 0, these bits control whether and when an A/D conversion is started:	0
		000	No start (this value should be used when clearing PDN to 0).	
		001	Start conversion now.	
		010	Start conversion when the edge selected by bit 27 occurs on the P2.10 / EINT0 / NMI pin.	
		011	Start conversion when the edge selected by bit 27 occurs on the P1.27 / CLKOUT / USB_OVRCRn / CAP0.1 pin.	
		100	Start conversion when the edge selected by bit 27 occurs on MAT0.1. Note that this does not require that the MAT0.1 function appear on a device pin.	
		101	Start conversion when the edge selected by bit 27 occurs on MAT0.3. Note that it is not possible to cause the MAT0.3 function to appear on a device pin.	
		110	Start conversion when the edge selected by bit 27 occurs on MAT1.0. Note that this does not require that the MAT1.0 function appear on a device pin.	
		111	Start conversion when the edge selected by bit 27 occurs on MAT1.1. Note that this does not require that the MAT1.1 function appear on a device pin.	
27	EDGE		This bit is significant only when the START field contains 010-111. In these cases:	0
		1	Start conversion on a falling edge on the selected CAP/MAT signal.	
		0	Start conversion on a rising edge on the selected CAP/MAT signal.	
31:28	-		Reserved, user software should not write ones to reserved bits. The value read from a reserved bit is not defined.	NA

Selecciono el canal que voy a convertir

Selecciono un divisor para el PCLK_ADC0 (el clock del ADC no puede superar los 13Mhz)

Realiza conversiones continuas. En cada uno de los canales colocados en '1' en los bit de selección de canal se detiene colocando el bit en cero

Habilitamos el periférico

Estos bits controlan el arranque de la conversión cuando Burst = '0'

Seleccionamos el flanco para la opción anterior

START		When the BURST bit is 0, these bits control whether and when an A/D conversion is started:	0
	000	No start (this value should be used when clearing PDN to 0).	
	001	Start conversion now.	
	010	Start conversion when the edge selected by bit 27 occurs on the P2.10 / EINT0 / NMI pin. Set the pin function to EINT0 in PINSEL4 register.	
	011	Start conversion when the edge selected by bit 27 occurs on the P1.27 / CLKOUT / USB_OVRCRn / CAP0.1 pin. Set the pin function to CAP0.1 in PINSEL3 register.	
	100	Start conversion when the edge selected by bit 27 occurs on MAT0.1. Note that this does not require that the MAT0.1 function appear on a device pin.	
	101	Start conversion when the edge selected by bit 27 occurs on MAT0.3. Note that it is not possible to cause the MAT0.3 function to appear on a device pin.	
	110	Start conversion when the edge selected by bit 27 occurs on MAT1.0. Note that this does not require that the MAT1.0 function appear on a device pin.	
	111	Start conversion when the edge selected by bit 27 occurs on MAT1.1. Note that this does not require that the MAT1.1 function appear on a device pin.	

Lectura de valores digitales

Hay 8 canales ADC, cada uno correspondiente a un pin analógico. El valor digitalizado correspondiente a la tensión analógica de entrada se almacena en 12 bits en uno de los registros de datos A / D: ADDR0 a ADDR7, donde cada registro corresponde a un pin analógico.
La figura de Campos de registro de ADDR ilustra los campos de los registros de ADDRx.

CAMPOS DE REGISTROS DE CONTROL A/D (ADDR X)

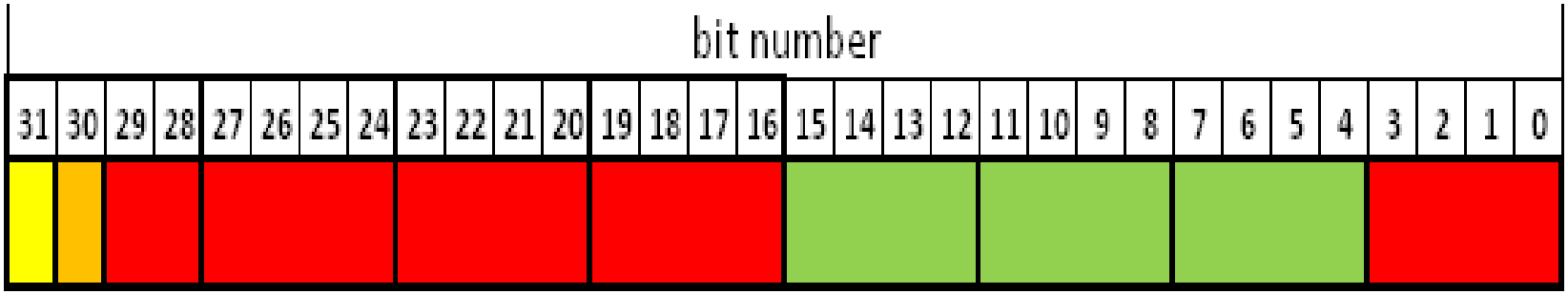

Bit 30 is OVERRUN. If you don't use burst mode, forget about this pin. This bit is 1 in burst mode if the results of one or more conversions was (were) lost and overwritten before the conversion that produced the result in the RESULT bits. This bit is cleared when the register is read.

Your RESULT (12 bit digitised value) is stroed in bits 4 to 15.

Bit 31 is DONE. It will be set to 1 when conversion is comlete. It is cleared when when the register is read.

RED are reserved bits.

A/D Interrupt Enable register (AD0INTEN - 0x4003 400C)

Este registro permite controlar qué canales A / D generan una interrupción cuando la conversión esta completa Por ejemplo, puede ser deseable usar algunos canales A / D para monitorear los sensores continuamente realizando conversiones en ellos. El más reciente los resultados son leídos por el programa de aplicación cada vez que son necesarios. En este caso, un interrupción no es deseable al final de cada conversión para algunos canales A / D.

Table 534: A/D Interrupt Enable register (AD0INTEN - address 0x4003 400C) bit description

Bit	Symbol	Value	Description	Reset value
0	ADINTEN0	0	Completion of a conversion on ADC channel 0 will not generate an interrupt.	0
		1	Completion of a conversion on ADC channel 0 will generate an interrupt.	
1	ADINTEN1	0	Completion of a conversion on ADC channel 1 will not generate an interrupt.	0
		1	Completion of a conversion on ADC channel 1 will generate an interrupt.	
2	ADINTEN2	0	Completion of a conversion on ADC channel 2 will not generate an interrupt.	0
		1	Completion of a conversion on ADC channel 2 will generate an interrupt.	

Table 534: A/D Interrupt Enable register (AD0INTEN - address 0x4003 400C) bit description *...continued*

Bit	Symbol	Value	Description	Reset value
3	ADINTEN3	0	Completion of a conversion on ADC channel 3 will not generate an interrupt.	0
		1	Completion of a conversion on ADC channel 3 will generate an interrupt.	
4	ADINTEN4	0	Completion of a conversion on ADC channel 4 will not generate an interrupt.	0
		1	Completion of a conversion on ADC channel 4 will generate an interrupt.	
5	ADINTEN5	0	Completion of a conversion on ADC channel 5 will not generate an interrupt.	0
		1	Completion of a conversion on ADC channel 5 will generate an interrupt.	
6	ADINTEN6	0	Completion of a conversion on ADC channel 6 will not generate an interrupt.	0
		1	Completion of a conversion on ADC channel 6 will generate an interrupt.	
7	ADINTEN7	0	Completion of a conversion on ADC channel 7 will not generate an interrupt.	0
		1	Completion of a conversion on ADC channel 7 will generate an interrupt.	
8	ADGINTEN	0	Only the individual ADC channels enabled by ADINTEN7:0 will generate interrupts. **Remark:** This bit must be set to 0 in burst mode (BURST = 1 in the AD0CR register).	1
		1	Only the global DONE flag in ADDR is enabled to generate an interrupt.	
31:17	-		Reserved, user software should not write ones to reserved bits. The value read from a reserved bit is not defined.	NA

Habilita la generación de interrupción de cada canal

Determina si se va a generar una interrupción por los canales de conversión o por la conversión Global

Registro de estado de A / D (ADSTAT - 0x4003 4030)

El registro de estado A / D permite verificar el estado de todos los canales A / D simultáneamente. Los indicadores DONE y OVERRUN aparecen en el registro ADDRn para cada canal A / D se reflejan en ADSTAT. El indicador de interrupción (el OR lógico de todos los indicadores DONE) también se encuentra en ADSTAT.

Table 535: A/D Status register (AD0STAT - address 0x4003 4030) bit description

Bit	Symbol	Description	Reset value
0	DONE0	This bit mirrors the DONE status flag from the result register for A/D channel 0.	0
1	DONE1	This bit mirrors the DONE status flag from the result register for A/D channel 1.	0
2	DONE2	This bit mirrors the DONE status flag from the result register for A/D channel 2.	0
3	DONE3	This bit mirrors the DONE status flag from the result register for A/D channel 3.	0
4	DONE4	This bit mirrors the DONE status flag from the result register for A/D channel 4.	0
5	DONE5	This bit mirrors the DONE status flag from the result register for A/D channel 5.	0
6	DONE6	This bit mirrors the DONE status flag from the result register for A/D channel 6.	0
7	DONE7	This bit mirrors the DONE status flag from the result register for A/D channel 7.	0
8	OVERRUN0	This bit mirrors the OVERRRUN status flag from the result register for A/D channel 0.	0
9	OVERRUN1	This bit mirrors the OVERRRUN status flag from the result register for A/D channel 1.	0
10	OVERRUN2	This bit mirrors the OVERRRUN status flag from the result register for A/D channel 2.	0
11	OVERRUN3	This bit mirrors the OVERRRUN status flag from the result register for A/D channel 3.	0
12	OVERRUN4	This bit mirrors the OVERRRUN status flag from the result register for A/D channel 4.	0
13	OVERRUN5	This bit mirrors the OVERRRUN status flag from the result register for A/D channel 5.	0
14	OVERRUN6	This bit mirrors the OVERRRUN status flag from the result register for A/D channel 6.	0
15	OVERRUN7	This bit mirrors the OVERRRUN status flag from the result register for A/D channel 7.	0
16	ADINT	This bit is the A/D interrupt flag. It is one when any of the individual A/D channel Done flags is asserted and enabled to contribute to the A/D interrupt via the ADINTEN register.	0
31:17	-	Reserved, user software should not write ones to reserved bits. The value read from a reserved bit is not defined.	NA

Registro global de datos A / D (AD0GDR - 0x4003 4004)

El Registro Global de datos A / D contiene el resultado de la conversión A / D más reciente que tiene completada, y también incluye copias de los indicadores de estado que acompañan a esa conversión. Los resultados de la conversión de ADC se pueden leer de dos maneras.
Una es usar el A / D Global Registro de datos para leer todos los datos del ADC.
Otra es usar los datos del canal A / D Registros.

Es importante usar un método consistentemente porque el DONE y Los indicadores OVERRUN pueden desconectarse entre AD0GDR y A / D Registros de datos de canal, que pueden causar interrupciones erróneas o actividad de DMA.

Table 532: A/D Global Data Register (AD0GDR - address 0x4003 4004) bit description

Bit	Symbol	Description	Reset value
3:0	-	Reserved, user software should not write ones to reserved bits. The value read from a reserved bit is not defined.	NA
15:4	RESULT	When DONE is 1, this field contains a binary fraction representing the voltage on the AD0[n] pin selected by the SEL field, as it falls within the range of V_{REFP} to V_{REFN}. Zero in the field indicates that the voltage on the input pin was less than, equal to, or close to that on V_{REFN}, while 0xFFF indicates that the voltage on the input was close to, equal to, or greater than that on V_{REFP}.	NA
23:16	-	Reserved, user software should not write ones to reserved bits. The value read from a reserved bit is not defined.	NA
26:24	CHN	These bits contain the channel from which the RESULT bits were converted (e.g. 000 identifies channel 0, 001 channel 1...).	NA
29:27	-	Reserved, user software should not write ones to reserved bits. The value read from a reserved bit is not defined.	NA
30	OVERRUN	This bit is 1 in burst mode if the results of one or more conversions was (were) lost and overwritten before the conversion that produced the result in the RESULT bits. This bit is cleared by reading this register.	0
31	DONE	This bit is set to 1 when an A/D conversion completes. It is cleared when this register is read and when the ADCR is written. If the ADCR is written while a conversion is still in progress, this bit is set and a new conversion is started.	0

Registro A / D Trim (ADTRIM - 0x4003 4034)

Este registro será establecido por el código de arranque en la puesta en marcha. Contiene los valores de ajuste para el DAC y el ADC.
El usuario puede sobrescribir los valores de arranque para el ADC.
Los 12 bits son visibles cuando se lee este registro.

Table 536: A/D Trim register (ADTRM - address 0x4003 4034) bit description

Bit	Symbol	Description	Reset value
3:0	-	reserved.	NA
7:4	ADCOFFS	Offset trim bits for ADC operation. Initialized by the boot code. Can be overwritten by the user.	0
11:8	TRIM	written-to by boot code. Can not be overwritten by the user. These bits are locked after boot code write.	1111
31:12	-	Reserved, user software should not write ones to reserved bits. The value read from a reserved bit is not defined.	NA

Formas de trabajar (o diferentes configuraciones)

Disparo Controlado o Continuo

1) Burst = 1 . Colocamos en 1 cada canal que queremos convertir y dejamos que el conversor trabaje todo el tiempo cargando datos en en los registros de resultado. Cuando necesite un dato simplemente lo vamos a buscar dado que habrá un dato nuevo disponible.
2) Burst = 0. Convertimos un dato de un canal determinado en el momento en que nosotros deseamos.
    1) Ahora determinamos si vamos a detener el programa hasta que el dato esté disponible (poling sobre el bit DONE)
    2) Disparamos una interrupción para utilizar el dato cuando esté disponible y no perder tiempo de procesador en ver el estado de un bit.

Formas de disparo de las conversiones (Controlado)

26:24	START		When the BURST bit is 0, these bits control whether and when an A/D conversion is started:	0
		000	No start (this value should be used when clearing PDN to 0).	
		001	Start conversion now.	
		010	Start conversion when the edge selected by bit 27 occurs on the P2.10 / EINT0 / NMI pin.	
		011	Start conversion when the edge selected by bit 27 occurs on the P1.27 / CLKOUT / USB_OVRCRn / CAP0.1 pin.	
		100	Start conversion when the edge selected by bit 27 occurs on MAT0.1. Note that this does not require that the MAT0.1 function appear on a device pin.	
		101	Start conversion when the edge selected by bit 27 occurs on MAT0.3. Note that it is not possible to cause the MAT0.3 function to appear on a device pin.	
		110	Start conversion when the edge selected by bit 27 occurs on MAT1.0. Note that this does not require that the MAT1.0 function appear on a device pin.	
		111	Start conversion when the edge selected by bit 27 occurs on MAT1.1. Note that this does not require that the MAT1.1 function appear on a device pin.	

Configuración básica El ADC se configura utilizando los siguientes registros:

1. Potencia: en el registro PCONP (Tabla 46), configure el bit PCADC. Observación: al reiniciar, el ADC está desactivado. Para habilitar el ADC, primero configure el bit PCADC, y luego habilitar el ADC en el registro AD0CR (bit PDN Tabla 531). Para desactivar el ADC, primero borre el bit PDN, y luego borre el bit PCADC.

2. Reloj: en el registro PCLKSEL0 (Tabla 40), seleccione PCLK_ADC. Para escalar el reloj para el ADC, vea los bits CLKDIV en la Tabla 531.

3. Pines: habilite los pines ADC0 a través de los registros PINSEL. Seleccione los modos de pin para el puerto pines con funciones ADC0 a través de los registros PINMODE (Sección 8.5).

4. Interrupciones: para habilitar las interrupciones en el ADC, consulte la Tabla 534. Las interrupciones se habilitan en el NVIC usando el registro apropiado Enable Set. Deshabilitar el ADC interrumpe en el NVIC usando el registro apropiado Enable Set.

5. DMA: Vea la Sección 29.6.4. Para las conexiones del sistema GPDMA, consulte la Tabla 543.

```
static void init_ADC_PINS1(void)
{
PINSEL_CFG_Type PinCfg;

PinCfg.Funcnum = 1;
PinCfg.OpenDrain = 0;
PinCfg.Pinmode = 2;
PinCfg.Portnum = 0;
PinCfg.Pinnum = 23;
PINSEL_ConfigPin(&PinCfg);
}

static void init_ADC_PINS2(void)
{
PINSEL_CFG_Type PinCfg;

PinCfg.Funcnum = 1;
PinCfg.OpenDrain = 0;
PinCfg.Pinmode = 2;
PinCfg.Portnum = 0;
PinCfg.Pinnum = 25;
PINSEL_ConfigPin(&PinCfg);
}
```

```
int ADC_Val1, ADC_Val2;
double v1,v2;

init_ADC_PINS1();
init_ADC_PINS2();

ADC_Init(LPC_ADC, 10000);
LPC_ADC->ADGDR &= ~(1<<31);

ADC_ChannelCmd (LPC_ADC, ADC_CHANNEL_0, ENABLE);
ADC_ChannelCmd (LPC_ADC, ADC_CHANNEL_2, ENABLE);

while(1)
{
ADC_StartCmd(LPC_ADC, ADC_START_NOW);

while (!(ADC_ChannelGetStatus(LPC_ADC,ADC_CHANNEL_0,ADC_DATA_DONE)));
ADC_Val1 = ADC_ChannelGetData(LPC_ADC,ADC_CHANNEL_0);
v1 = (3.15/4096)*ADC_Val1;
printf("FSR voltage is %.2lf\n", v1);

while (!(ADC_ChannelGetStatus(LPC_ADC,ADC_CHANNEL_2,ADC_DATA_DONE)));

//##########  STUCK  ############

ADC_Val2 = ADC_ChannelGetData(LPC_ADC,ADC_CHANNEL_2);
v2 = (3.15/4096)*ADC_Val2;
printf("IR voltage is %.2lf\n", v2);

Timer0_Wait(2000);
}
```

gracias
merci
obrigado
danke
teşekkür ederim
sagolun
sukriya
taiku
hvala
arigatō
terima kasih
ngiyabonga
mochchakkeram
dziękuję
bedankt
go raibh maith agat
dank je
tapadh leat
takk
thank you
grazie
mauruuru
kop khun krap
dakujem
mamnun
dankon
dhanyavadagalu
merce
gracies
kia ora
murakoze
xièxie
sulpay
kam sah hamnida
dankie
diolch
obrigada
kiitos
akun
nandri
gràcie
blagodaram
barka
didi madloba
dhanyavad
mèsi
misaotra
mahalo
welalin
spas
rahmat
aciū
tau
tenki
gratias ago
grazzi
asante
dekuji
vinaka
enkosi
koszonom
shukriya
bayarlalaa
matondo
chnorakaloutioun
trugarez
meirsi
manana
nanni
paldies
sobodi
tack
djiere dieuf